1. 291683-CONNECTION TANK ASSEMBLY
2. 291684-RETURN TANK ASSEMBLY
3. 291685-CORE AND HEADER ASSEMBLY
4. 291686-SIDE ASSEMBLY
5. 291687-SIDE ASSEMBLY
6. 286941-FILLER STRIP
7. 286942-FILLER STRIP

67049-291111
SOCN
19207-12297938
YOUNG 291111
SERIAL NO._____
CII XM92028A1

8. 323235-INDENTIFICATION PLATE
9. 291634-COVER-2 REQD
10. 135325-THREAD PROTECTOR-8 REQD

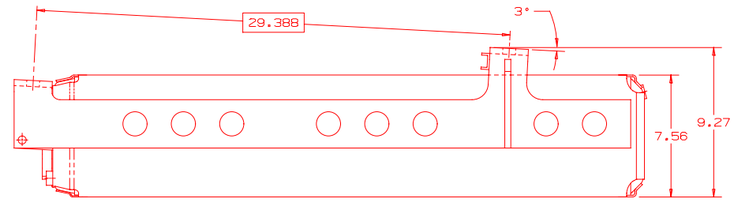

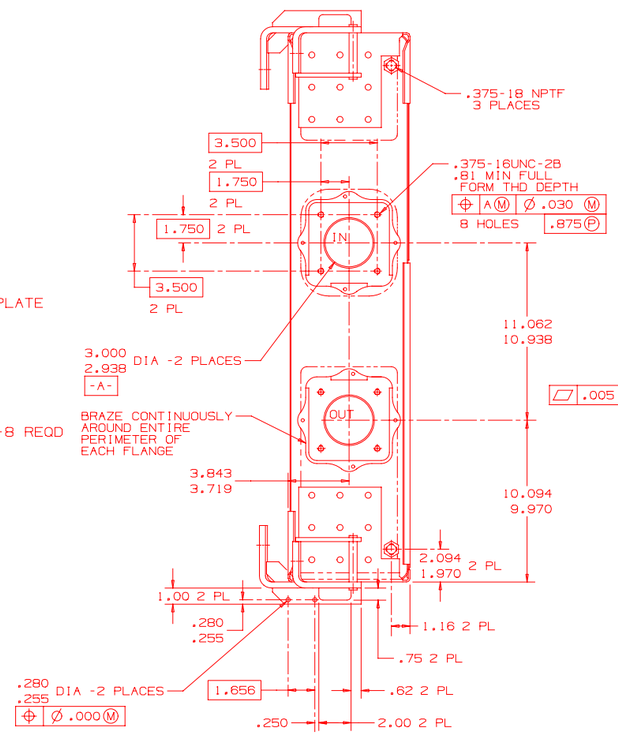

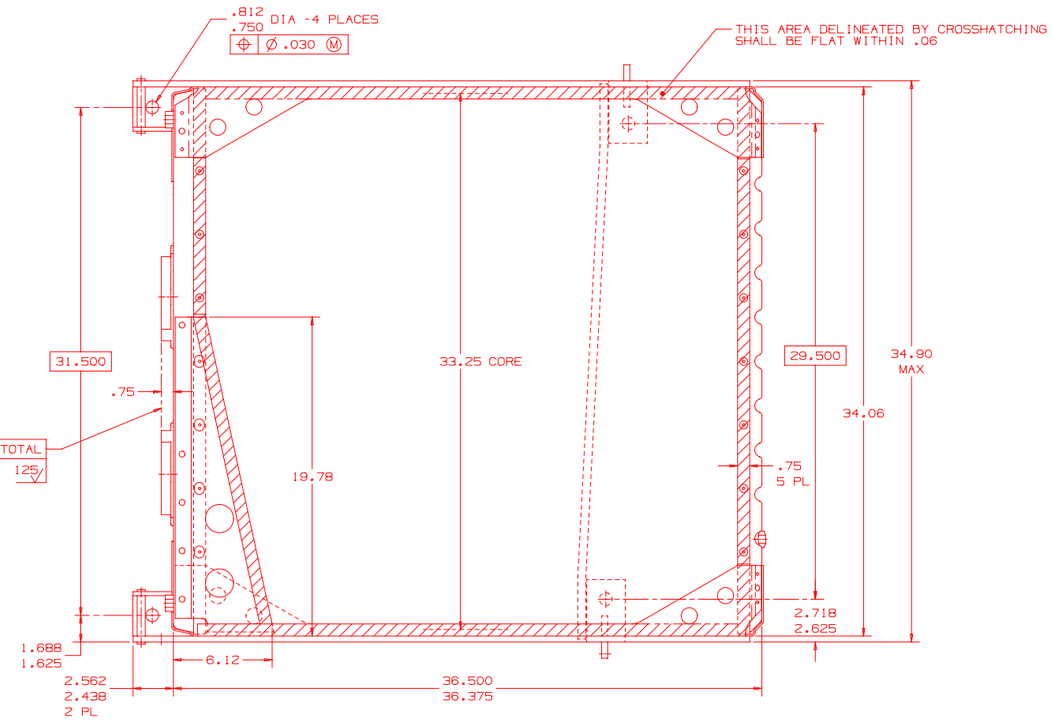

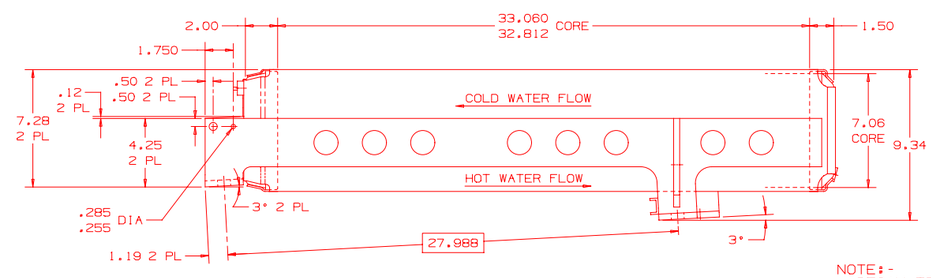

NOTE:-
FOG INTERIOR SURFACES PER AM-9111 WITH OIL, FED. SPEC. VV-L-800 (TECTYL 900) PART NO. 940072 AND DRAIN.

NOTE:-
MASK OFF MACHINED SURFACES OF CONNECTION FLANGES BEFORE PAINTING. REMOVE MASK AND APPLY CORROSION PREVENTIVE COMPOUND (2 MILS THICK) MIL-C-16173 GR4 (TECTYL 846) PART NO. 313774 TO SURFACES AND INSIDE TAPPED HOLES. INSTALL COVER PART NO. 291634 AND THREAD PROTECTOR PART NO. 135325.

NOTE:-
DECAY TESTING FOR STATIC PRESSURE TEST IS REQUIRED.

PAINT NOTE:-
AM-9993 RED OXIDE PROMER

LTR	REVISION	ECN	DATE
A	REPLACES E291111 CHANGE 'RR' WITH NO CHANGES	DRZ	5--7--93

MAX WORKING PRESSURE PSI	18 PSI	WEIGHT 298 LBS	DRAWING INTERPRETATION IS IN ACCORDANCE WITH DOD-STD-100 DIMENSIONING AND TOLERANCING IS IN ACCORDANCE WITH ANSI Y14.5M-1982
MAX WORKING TEMPERATURE	F	VOLUME 25.2 QTS	TOLERANCES UNLESS OTHERWISE SPECIFIED .X ± .1 .XX ± .06 .XXX ± .030 ANGLES ± 2°
TEST PRESSURE PSI	25 PSI		

DR. DRZ 3--20--79
CHK.
APP.
JOB NO. 31102
SCALE .25
PAINT FINISH AM-9993
SIM TO:290000
CUSTOMER NUMBER 12297938
TITLE RAD DTR AAH 118
DESCRIPTION
DRAWING NUMBER X291111

YOUNG RADIATOR COMPANY - RACINE, WI 53404